THIS DOCUMENT AND THE INFORMATION CONTAINED THEREIN IS PROPRIETARY TO NEWMAR CORPORATION AND SHALL NOT BE USED OR DISCLOSED TO OTHERS, IN WHOLE OR IN PART, WITHOUT THE WRITTEN AUTHORIZATION OF NEWMAR CORPORATION.

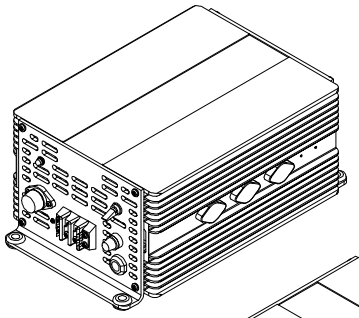

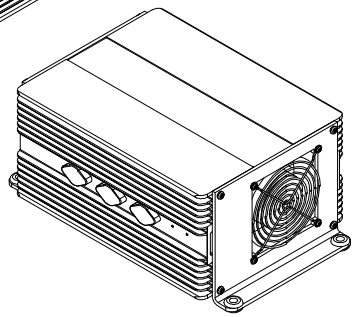

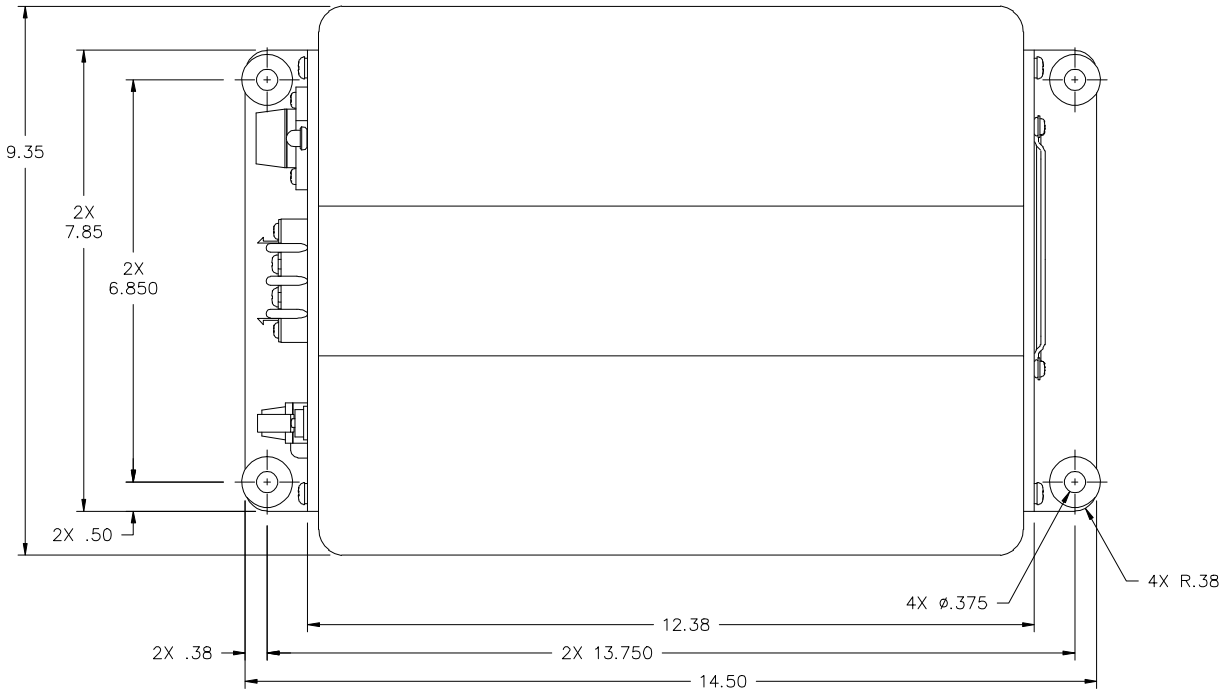

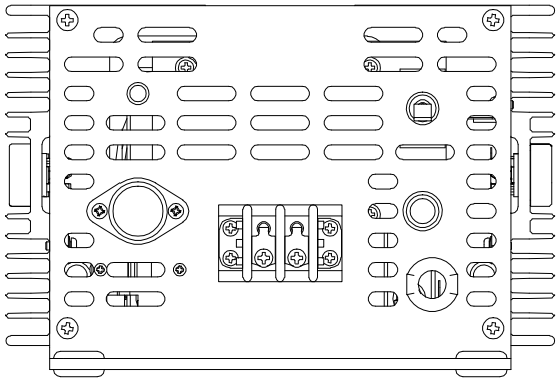

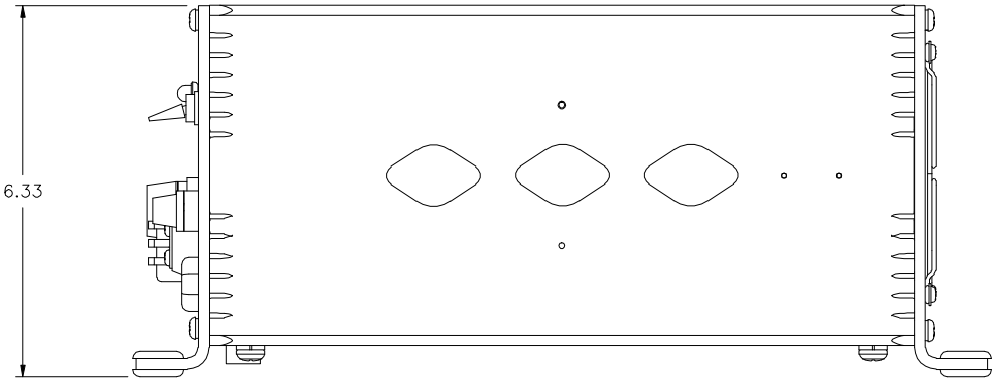

SCALE: 1/2
March 16 11y 10:36am

NEWMAR

OUTLINE AND MOUNTING
MODEL 115-24-18CD
PN 400-0166-0

SCALE	SIZE	DRAWING NO.	REV.
AS NOTED	B	15461-0	NC

SHEET 1 OF 1